PARK, TAIL, AND LICENSE LIGHTS

Component Index

Dash Fuse Box
Taillight Relay

PARK, TAIL, AND LICENSE LIGHTS

Circuit Schematic

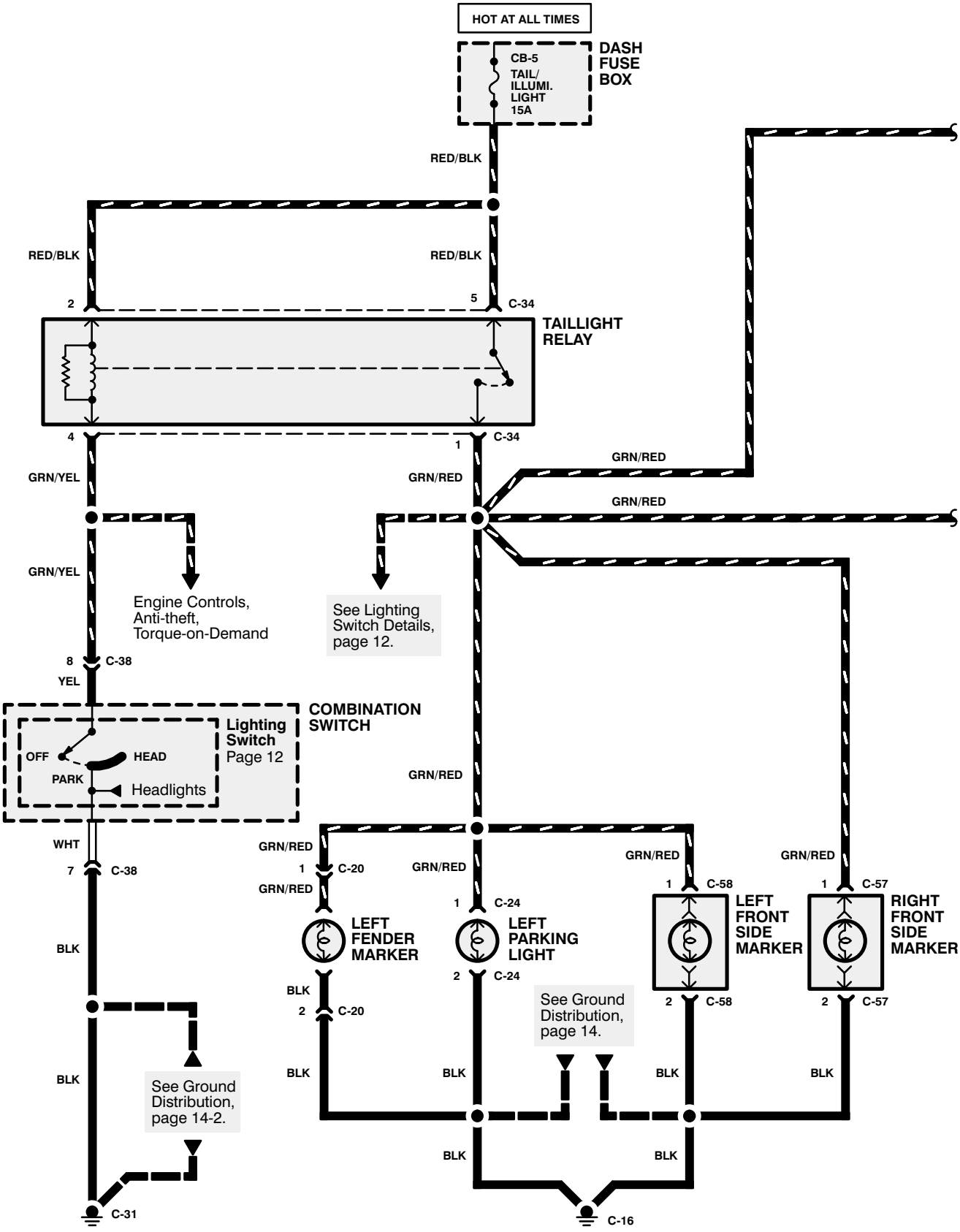

PARK, TAIL, AND LICENSE LIGHTS

Circuit Schematic

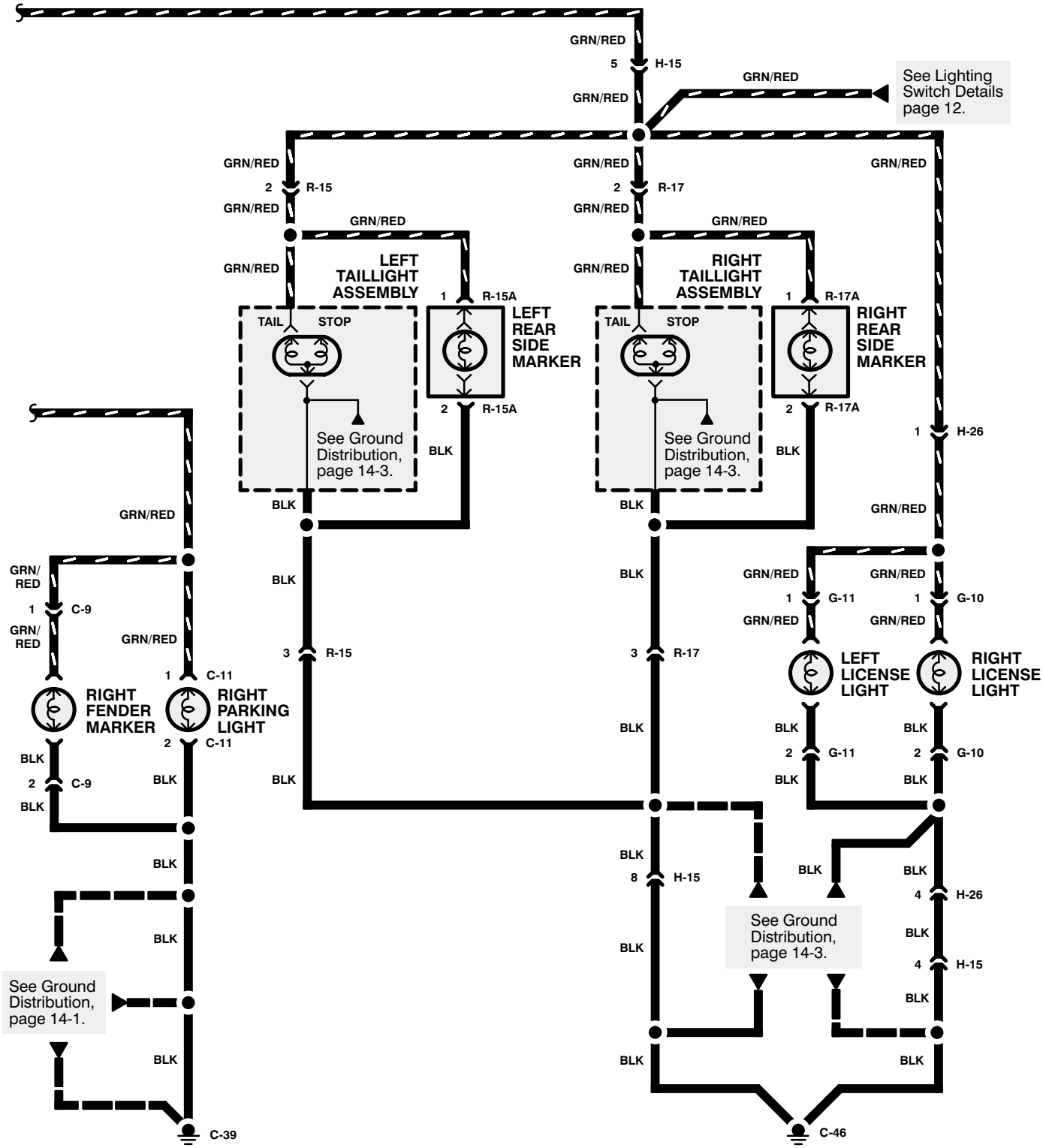

PARK, TAIL, AND LICENSE LIGHTS

Component Location Index

(Refer to Section 201 for photographs.)

Component		Photo No.
Dash Fuse Box	Behind left I/P side trim panel	36
Taillight Relay	Behind left kick panel	41
Connector		
C-9 (2-BLK)	On lower rear of right headlight assembly	17
C-11 (2-BLK)	On right parking light	10
C-38 (16-WHT)	Behind lower left I/P, right of steering column	47
C-20 (2-BLK)	On lower rear of left headlight assembly	13
C-24 (2-BLK)	On left parking light	2
C-57 (2-BLU)	On right front side marker	3
C-58 (2-BLU)	On left front side marker	3
G-10 (2-WHT)	In tailgate	75
G-11 (2-WHT)	In tailgate	75
H-15 (1-BLK)	Behind left side of I/P, above left kick panel on	42
H-26 (4-WHT)	Left rear of cargo compartment, behind trim panel	73
R-15 (6-WHT)	Left rear of cargo compartment, behind trim panel	73
R-15A (2-GRN)	On left rear side marker	76
R-17 (6-WHT)	Right rear of cargo compartment, behind trim panel	74
R-17A (2-GRN)	On right rear side marker	76
Ground		
C-16	Left rear of engine compartment, on inner fender panel	16
C-31	Behind right kick panel	57
C-39	Right rear of engine compartment on inner fender	23
C-46	Behind left kick panel	40

Circuit Operation

Battery voltage is applied to the taillight relay from the TAIL/ILLUMI. LIGHT fuse CB-5. With the lighting switch on PARK or HEAD, ground is provided to the taillight relay coil. The taillight relay energizes and battery voltage is applied to the park, license, and marker lights and the lights go on.